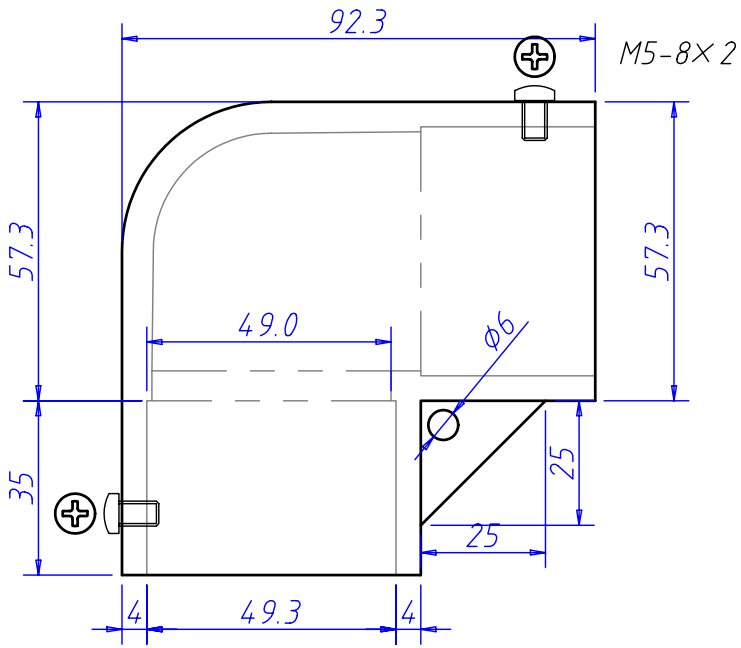

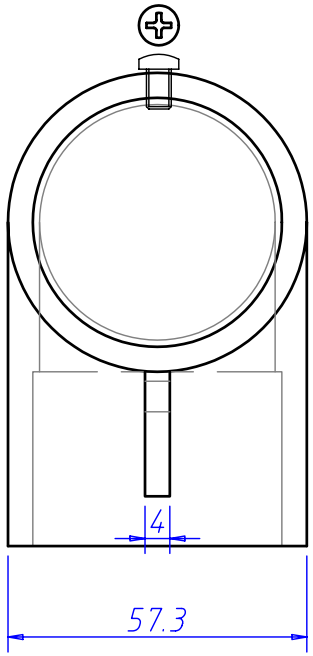

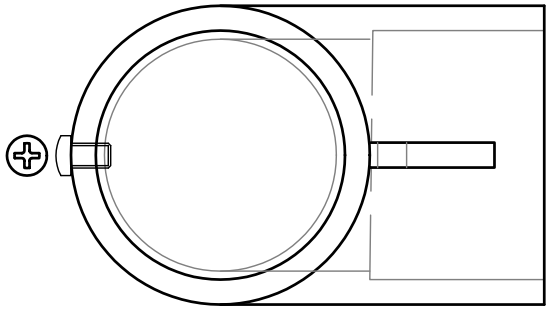

注記　内面バリは最小限にする

JAN 4562182301048

FILM NAME	F-999-20040824 Auto CAD
DRAWN CHECK APPR ISSUED	4-2L　SET SCREW COUP joint kogyo T.okano